cp pump systems

Double Safe! – Secondary Containment

Metallic Magnetic Coupled Pumps - MKP

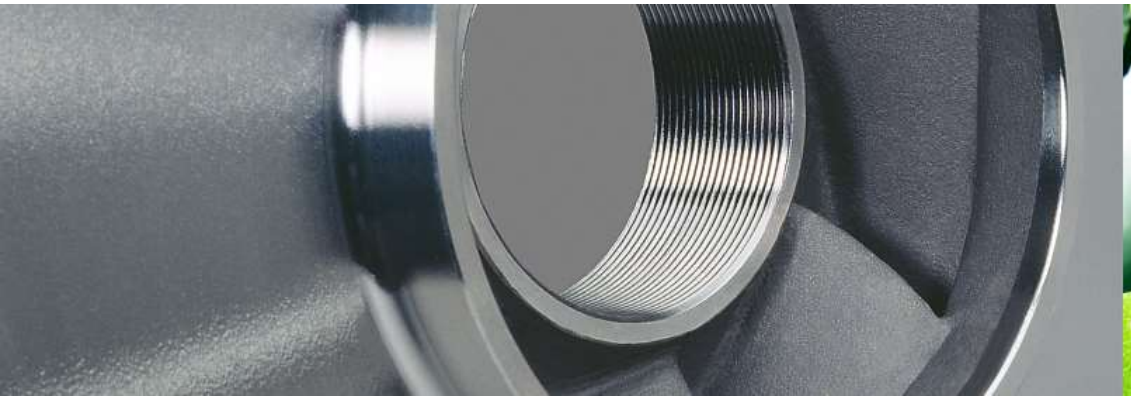

cleaner pumps, cleaner planet™

Why an Additional Sealing in a Sealless Pump?

- The **requirements** of pump operators in the chemical industry for **additional safety** in particularly **hazardous** applications with a high risk potential are **increasing**!

- The «Working group ‘pumps in the chemical industry’ in Germany» has defined requirements for protection measures / Safety Layer:
  - «…**additional measures** which **prevent**, that a product is released upon a **failure** of the primary containment shell.
  - The protection measures require, that such failure is **detected** and after activation of the protection measures the system is brought into a **safe state**. Frequently the safe state of the system is the **secondary containment shell and the stopping of the pump**.»

Which Additional Safety Measures do CP Pump Systems Provide?

- All CP magnetic drive pumps have a **primary containment shell / shroud**, which has proven itself in practice. The shroud of the metallic MKP is particularly **robust and field-proven**.
  - It is 'technically tight' and it allows neither drip leakage nor gaseous emissions.
  - The monitoring of the containment shell by means of a **patented Shroud Temperature Monitoring** indicates unwanted operating conditions effectively and quickly. In many applications this safety option is sufficient (*WSN1)!
- Increased requirements are now covered by the **secondary containment "secondary barrier"** and monitoring instruments (pressure and liquid detector) (*WSN2 fulfilled)
- CP Pump Systems has adapted the design of all metal magnetic drive pumps of the MKP series to the requirements and now offers an **optional secondary containment with radial shaft seal ring (RSSR)**

Secondary Containment – Operating Principle

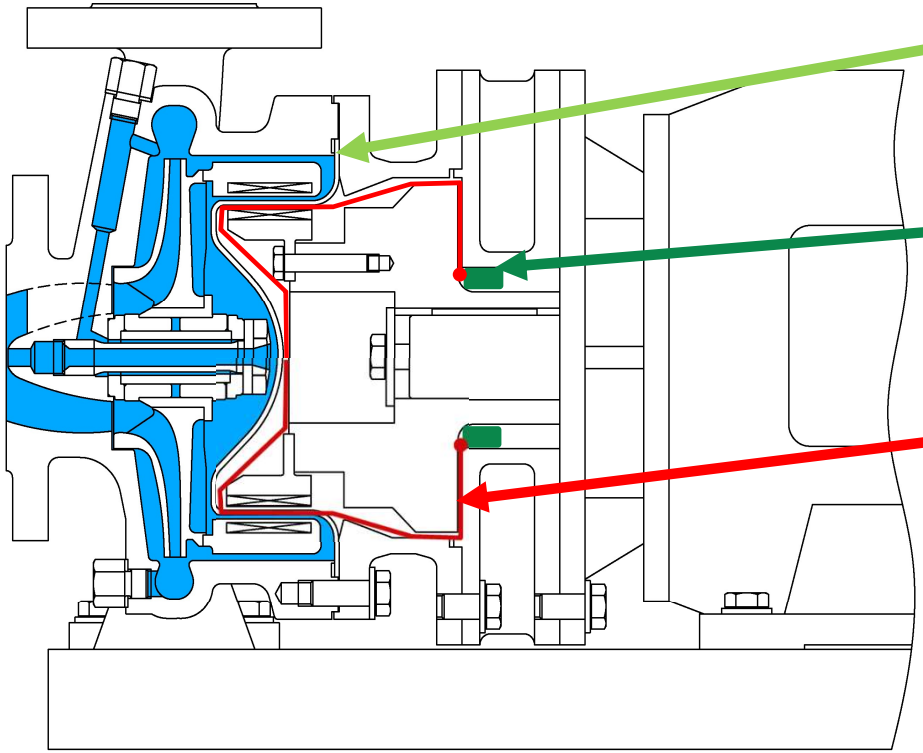

Primary Sealing
➔ Shroud – Containment Shell / Casing Gasket
➔ static

Secondary Containment / - Sealing
➔ Radial Shaft Sealing Ring (RSSR)
➔ Dynamic

Accident: Leaking of primary sealing

- Pressure up to 16 bar
- Temperature up to 120°C
- Leakage tight up to 30 minutes
- Maintenance free up to 2 years*

*depending on operating conditions

Secondary Containment ready for Bearing Frame or Close Coupled Execution

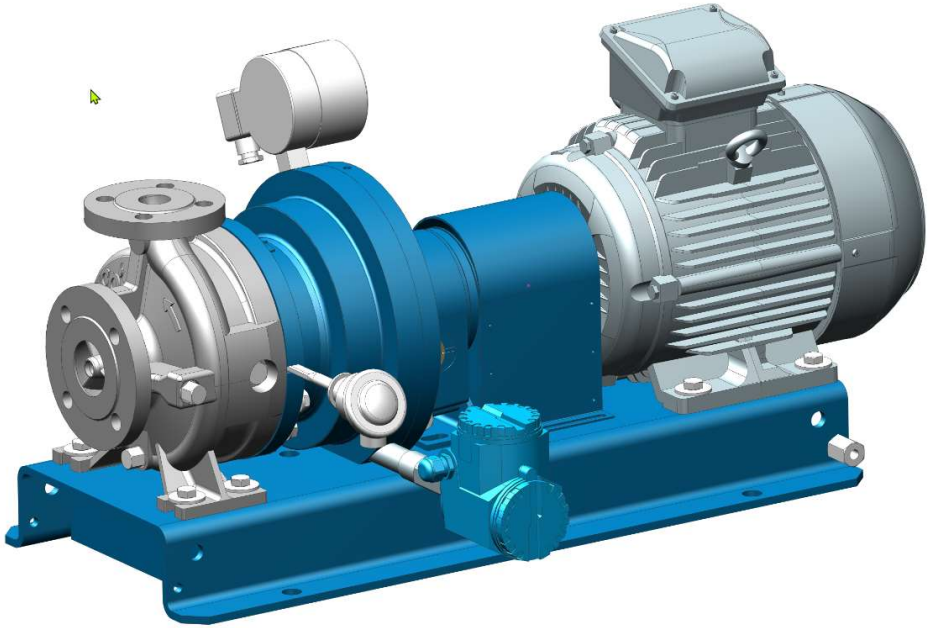

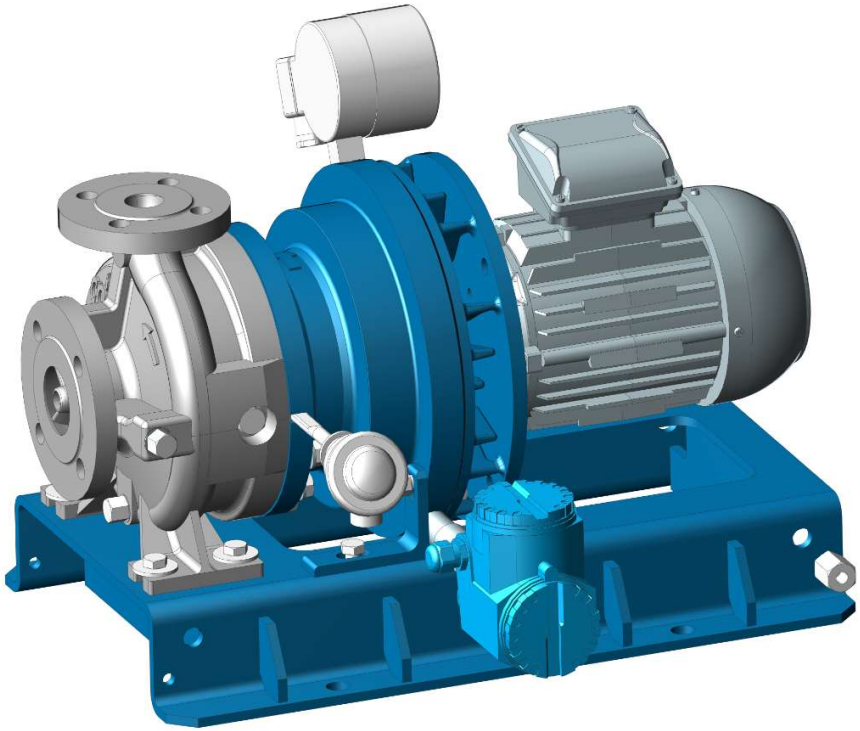

Pump Protection – MKP (Close Coupled Execution)

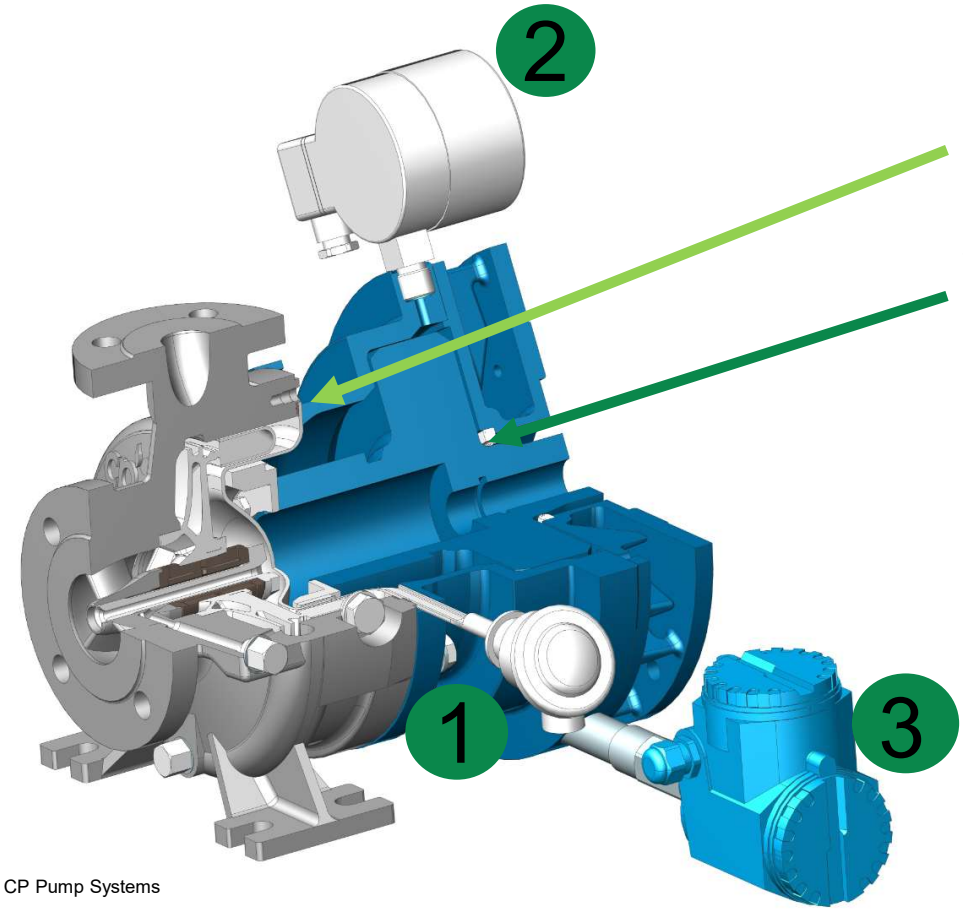

Primary Sealing
➔ Shroud – Containment Shell / Casing Gasket

Secondary Containment / - Sealing
➔ Radial Shaft Sealing Ring (RSSR)

(1) ➔ Shroud Temperature Monitoring
(2) ➔ PI / Pressure Indicator (Manometer)
(3) ➔ LI / Level Indicator (liquid detector; e.g. Liquiphant)

- WSN 1: PI or LI
- WSN 2: PI or LI; either PAH / LAH or PSH / LSH

Pump Protection – MKP (Bearing Frame Execution)

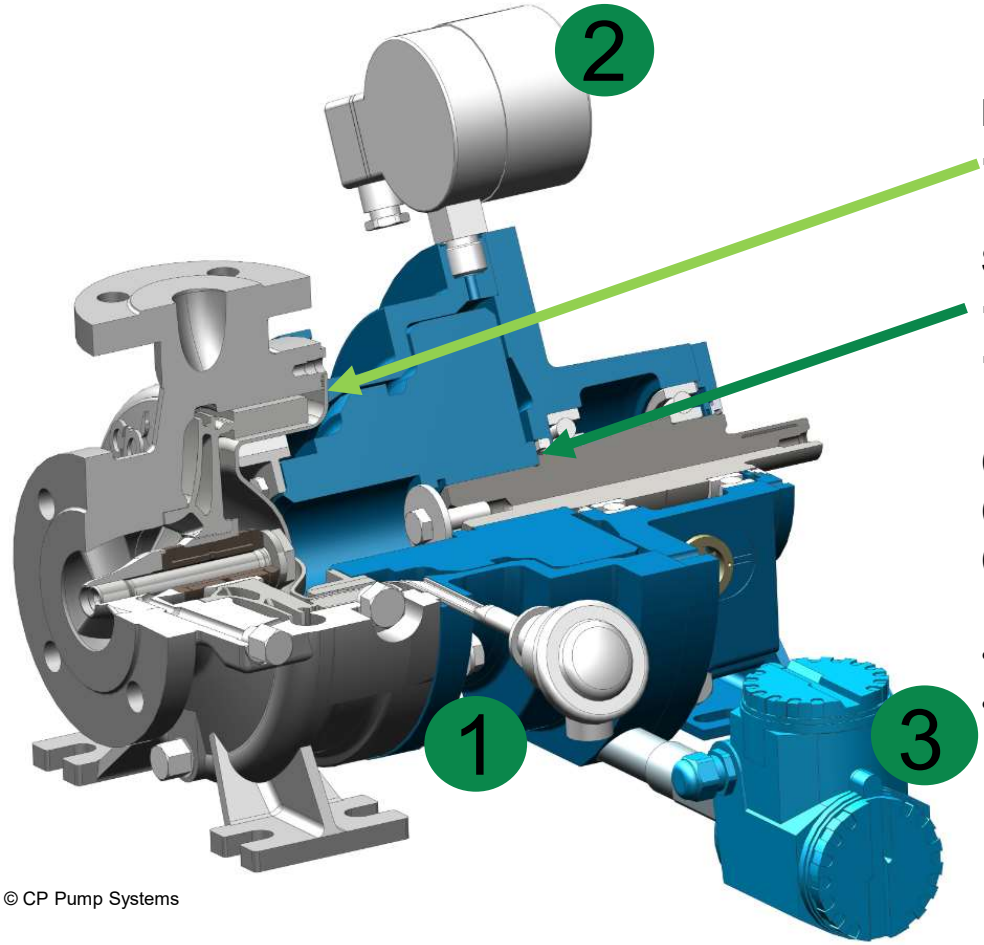

Primary Sealing
➔ Shroud – Containment Shell / Casing Gasket

Secondary Containment / - Sealing
➔ Radial Shaft Sealing Ring (RSSR)
➔ Labyrinth sealing motor side

(1) ➔ Shroud Temperature Monitoring
(2) ➔ PI / Pressure Indicator (Manometer)
(3) ➔ LI / Level Indicator (liquid detector; e.g. Liquiphant)

- WSN 1: PI or LI
- WSN 2: PI or LI; either PAH / LAH or PSH / LSH

RSSR – MKP (Bearing Frame Execution)– Detail View

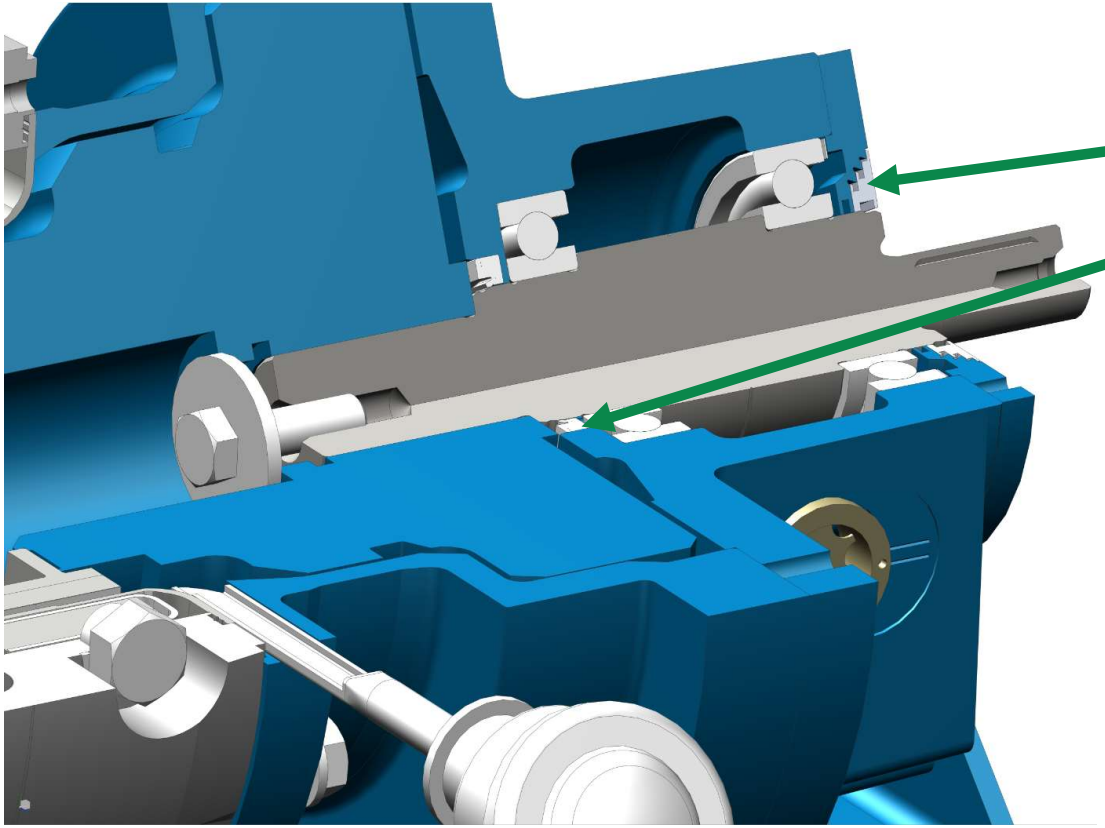

Secondary Containment / - Sealing

➔ Labyrinth sealing motor side

➔ Radial Shaft Sealing Ring (RSSR)

Thank You for Your Attention!

News and further information

cp-pumps.com

Follow us

linkedin.com | CP Pumpen AG

facebook.com | CPPumpSystems

youtube.com | CP Pumpen AG – CP Pump Systems