Solid PTFE Magnetic Drive Centrifugal Pumps

Efficient – Robust – Permeation-Resistant

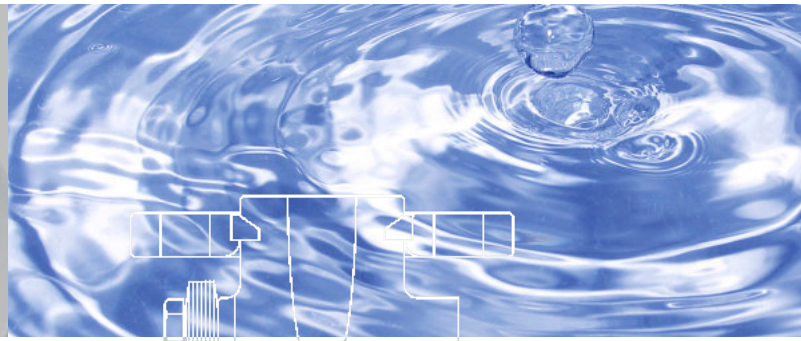

MSKP
Magnetic drive chemical process pump

MSKPP
Magnetic drive chemical process peripheral pump

MSKS
Self-priming magnetic drive chemical process side channel pump

Designed to:
DIN EN ISO 2858, 5199 and 15783

Compliant with:
EC Machinery Directive
EC ATEX Directive

With SI and US range curves

Impeller of the MSKS self-priming magnetic drive chemical process side channel pump

CP Pump Systems
Solid PTFE Magnetic Drive Centrifugal Pumps

Our company

CP is a highly innovative Swiss company with a rich tradition. Since 1948 we have specialised in developing and manufacturing premium quality high-tech products and providing services for international customers with the most rigorous requirements.

We produce reliable and innovative centrifugal pumps for the chemical, pharmaceutical, petrochemical, biotechnology, food and beverage industries. CP is represented in over 70 countries through its network and offers first-class customer services. This proximity guarantees customers worldwide an efficient local service.

Reflecting our deep commitment to energy efficient products and services, we deliver environmentally friendly solutions that always go hand in hand with maximum safety and economy. As a pioneer in this area, we advise and assist customers with a wide range of needs – throughout the value chain.

CP operates a quality management system certified to ISO 9001.

Solid PTFE magnetic drive centrifugal pumps

With their sealless design, the MSKP, MSKPP and MSKS magnetic drive pumps are ideal to meet the stringent requirements of chemical processing and a multitude of other industries. These highly advanced and extremely energy efficient pumps are built to handle a huge variety of corrosive fluids reliably and absolutely safely, especially in applications requiring resistance to permeation.

The pump casing is constructed of thick vacuum-, corrosion- and permeation-resistant solid plastic. Use of carbon filled PTFE prevents electrostatic charging on the casing. Alternatively, the pumps are also available in virgin PTFE or PVDF.

Made of pure SSiC (sintered silicon carbide) in a robust design engineered for ceramics, the bearing assembly ensures highly reliable pump operation. Plain and thrust bearings are securely locked in place to resist torsional forces using a polygonal form-fit, self-centring system.

Each of the pumps in our solid PTFE magnetic drive range features a different type of impeller. This enables them to be used for a wide spectrum of applications to provide exactly the right pump for every fluid handling need.

MSKP
Solid PTFE Magnetic Drive Chemical Process Pump

The MSKP has a closed radial-flow plastic impeller with a metal core for increased mechanical strength. The pump's connection dimensions and performance data conform to DIN EN ISO 2858, making the MSKP easy to retrofit into any installation to replace old pumps.

Technical data	
Capacities (min./max.)	0.25 to 70 m³/h
Heads (min./max.)	2 to 90 m
Temperatures (min./max.)	–20 to +100°C
Kinematic viscosities	0.5 to 350 mm²/s
Solids handling	up to 5% solids concentration, depending on the pumped fluid*

Directives
EC Machinery Directive
EC ATEX Directive

Standards
DIN EN ISO 2858
DIN EN ISO 5199
DIN EN ISO 15783

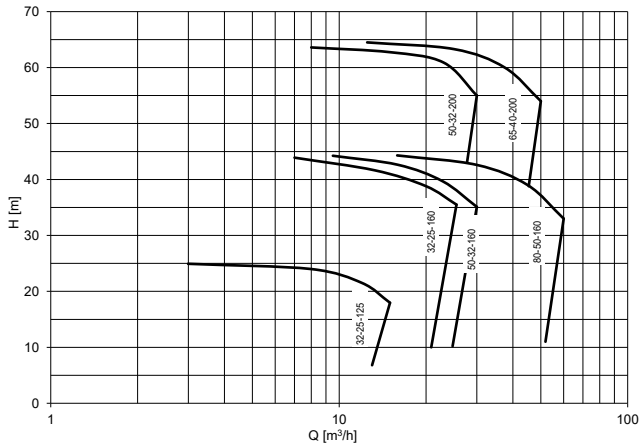

3000 rpm/50 Hz

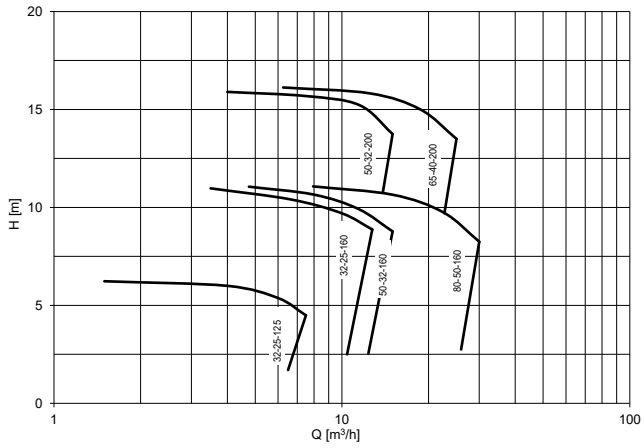

1500 rpm/50 Hz

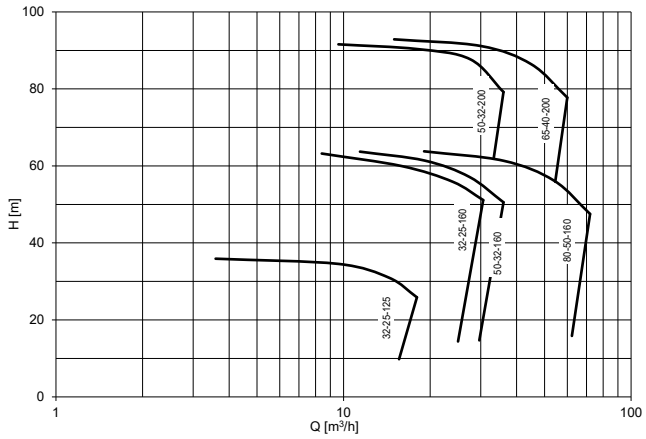

3600 rpm/60 Hz

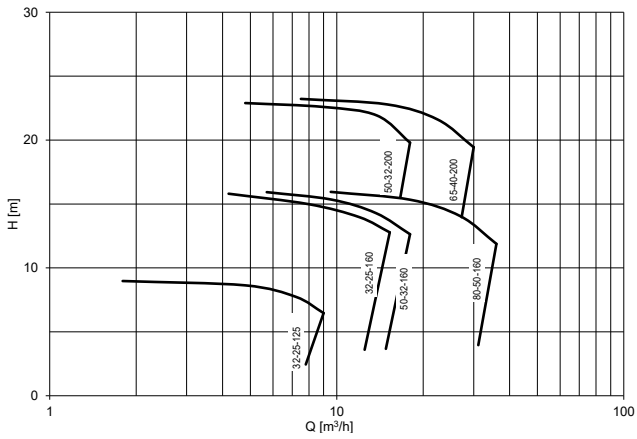

1800 rpm/60 Hz

*In general, media with solids content can be transported, but application-specific verification in advance is absolutely necessary.

MSKP
Solid PTFE Magnetic Drive Chemical Process Pump

The MSKP has a closed radial-flow plastic impeller with a metal core for increased mechanical strength. The pump's connection dimensions and performance data conform
to DIN EN ISO 2858, making the MSKP easy to retrofit into any installation to replace old pumps.

Technical data	
Capacities (min./max.)	1.1 to 308.2 gpm
Heads (min./max.)	6.6 to 295.3 ft
Temperatures (min./max.)	–4 to 212° F
Kinematic viscosities	0.5 to 350 cSt
Solids handling	up to 5% solids concentration, depending on the pumped fluid*

Directives
EC Machinery Directive
EC ATEX Directive

Standards
DIN EN ISO 2858
DIN EN ISO 5199
DIN EN ISO 15783

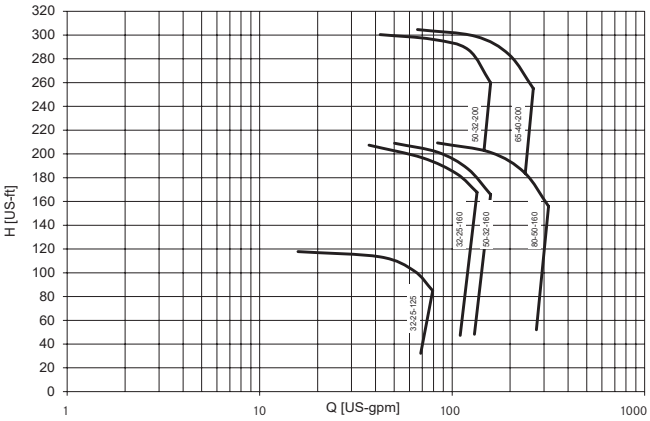

3600 rpm/60 Hz US

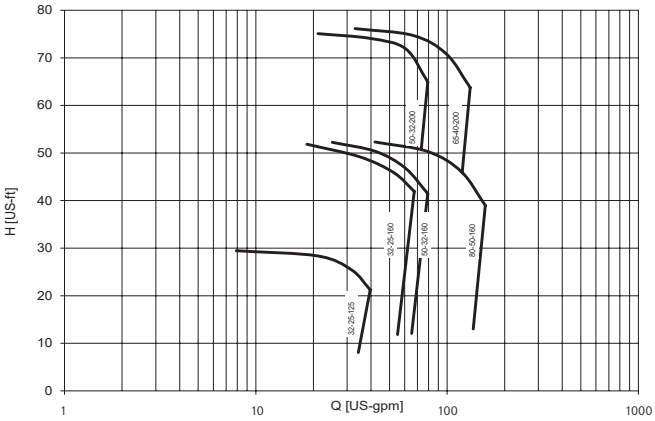

1800 rpm/60 Hz US

*In general, media with solids content can be transported, but application-specific verification in advance is absolutely necessary.

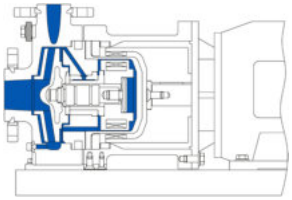

Close-coupled MSKP
with baseplate
–20°C to +100°C

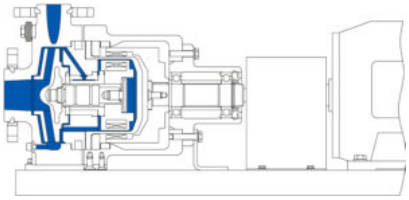

Frame-mounted MSKP
with baseplate
–20°C to +100°C

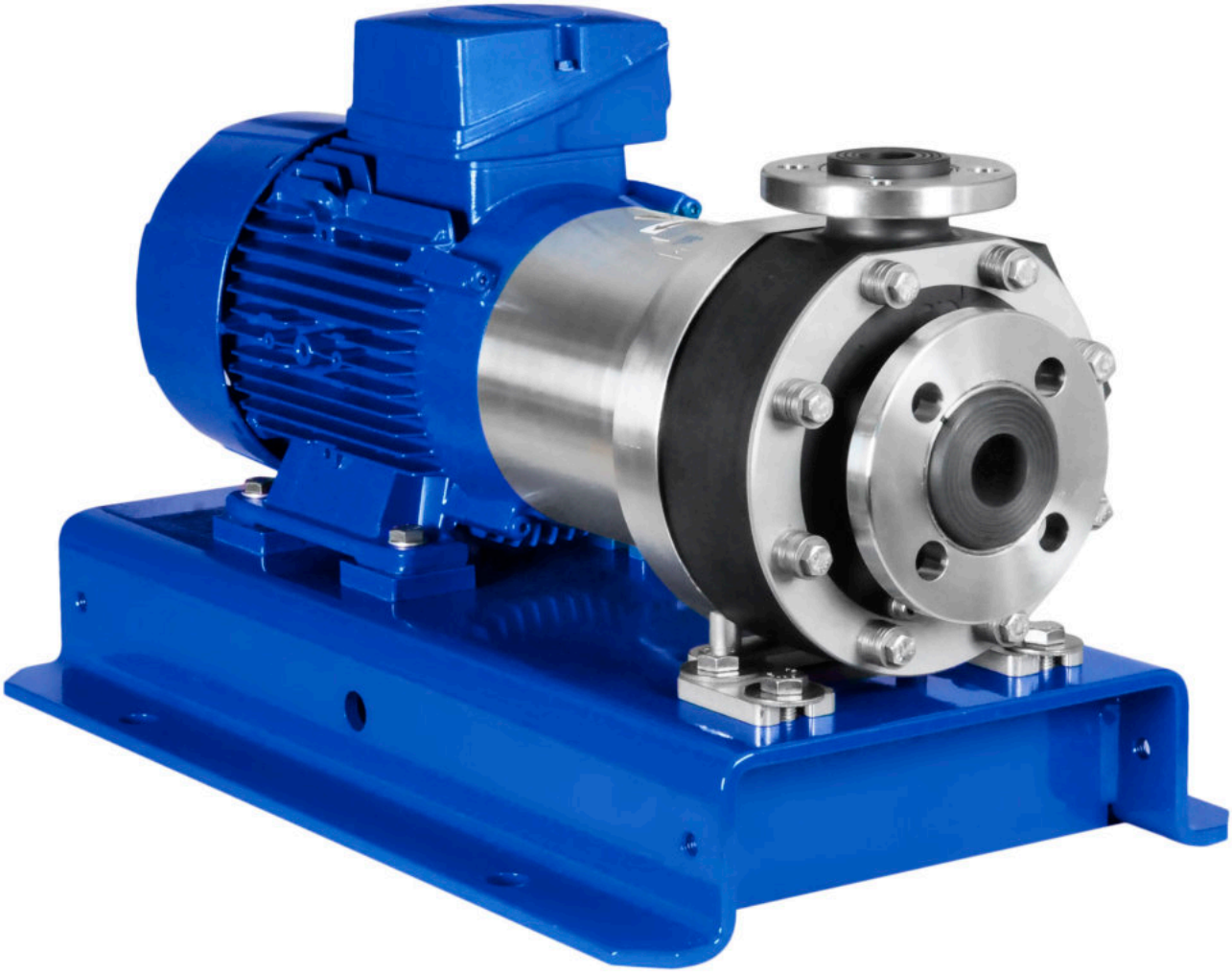

MSKP with baseplate and motor
horizontal close-coupled (–20°C to +100°C)

MSKPP
Solid PTFE Magnetic Drive Chemical Process Peripheral Pump

The MSKPP features a peripheral impeller with a metal core. This type of impeller allows the pump to generate high head at low flow rates, making it perfect for dosing and injection applications.

Technical data	
Capacities (min./max.)	0.25 to 7 m³/h
Heads (min./max.)	3 to 130 m
Temperatures (min./max.)	–20 to +100°C
Kinematic viscosities	0.5 to 350 mm²/s
Solids handling	0%

Directives
EC Machinery Directive
EC ATEX Directive

Standards
DIN EN ISO 5199
DIN EN ISO 15783

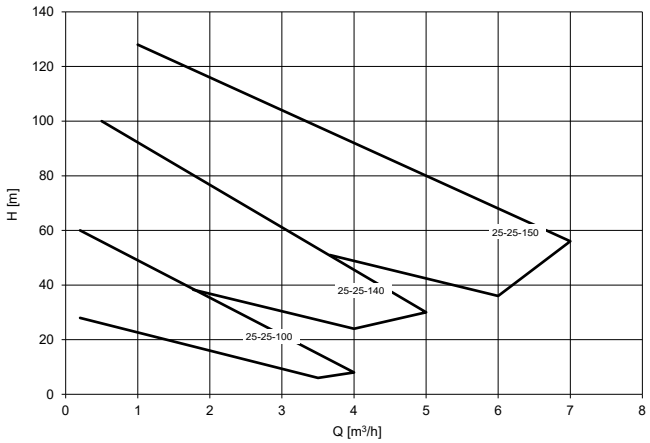

3000 rpm/50 Hz

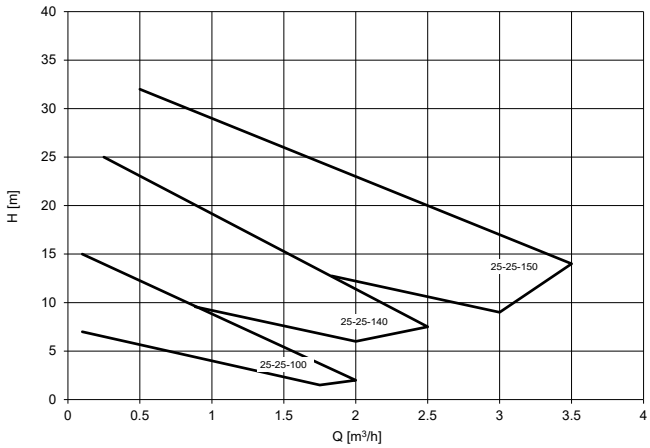

1500 rpm/50 Hz

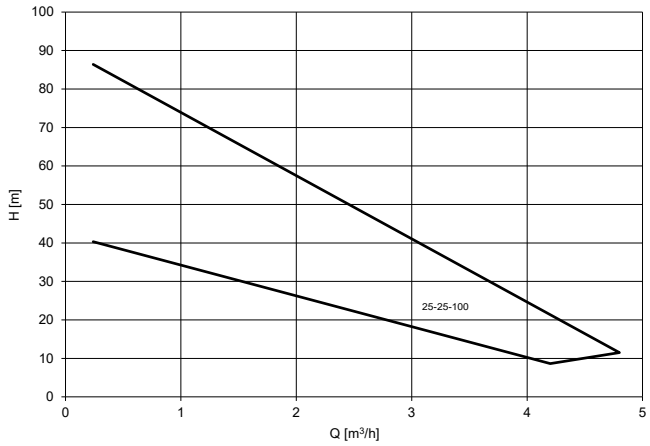

3600 rpm/60 Hz

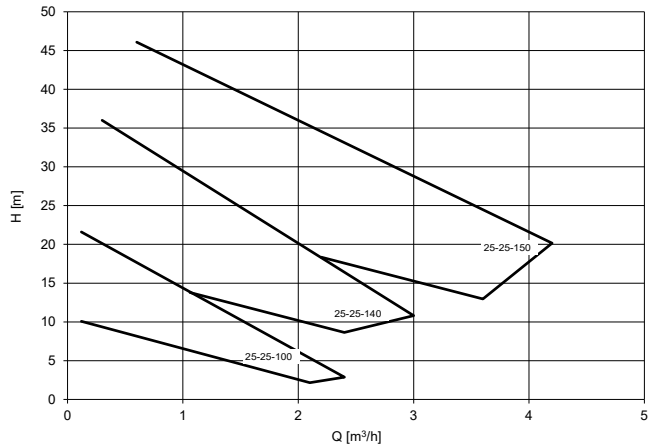

1800 rpm/60 Hz

MSKPP
Solid PTFE Magnetic Drive Chemical Process Peripheral Pump

The MSKPP features a peripheral impeller with a metal core. This type of impeller allows the pump to generate high head at low flow rates, making it perfect for dosing and injection applications.

Technical data	
Capacities (min./max.)	1.1 to 30.8 gpm
Heads (min./max.)	9.8 to 426.5 ft
Temperatures (min./max.)	–4 to +212°F
Kinematic viscosities	0.5 to 350 cSt
Solids handling	0%

Directives
EC Machinery Directive
EC ATEX Directive

Standards
DIN EN ISO 5199
DIN EN ISO 15783

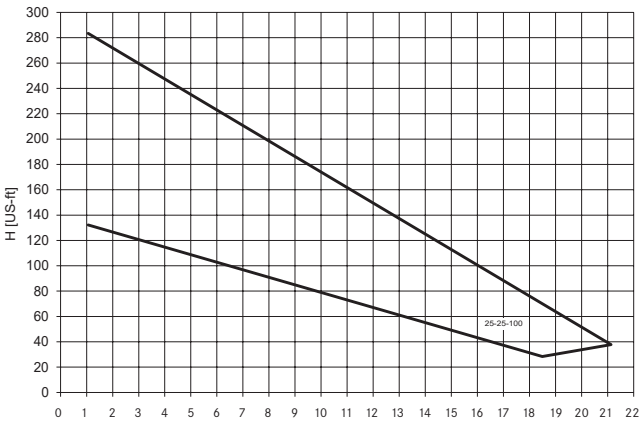

3600 rpm/60 Hz US

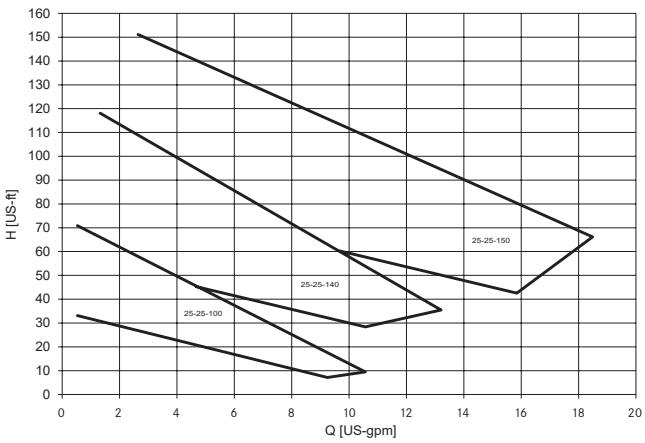

1800 rpm/60 Hz US

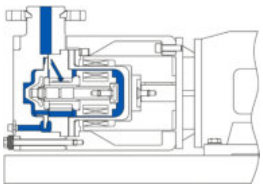

Close-coupled MSKPP
with baseplate
–20°C to +100°C

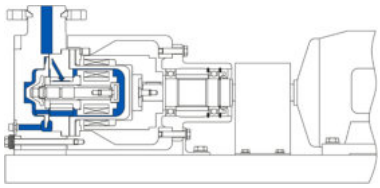

Frame-mounted MSKPP
with baseplate
–20°C to +100°C

MSKPP with motor
horizontal frame-mounted (–20°C to +100°C)

MSKS
Solid PTFE Self-Priming Magnetic Drive Chemical Process Side Channel Pump

The self-priming MSKS features a radial vane impeller with a metal core. This type of impeller allows the pump to handle fluids with a gas content up to 25%. A separate priming tank is not necessary because the pump evacuates the suction line itself by creating a vacuum. The MSKS can even readily pump entrained air in the suction line while running, thus increasing reliability of operation. This pump achieves suction lifts up to 8.5 m.

Technical data	
Capacities (min./max.)	0.2 to 2.5 m³/h
Heads (min./max.)	1 to 34m
Temperatures (min./max.)	–20 to +80°C
Kinematic viscosities	0.5 to 350 mm²/s
Solids handling	0%

Directives
EC Machinery Directive
EC ATEX Directive

Standards
DIN EN ISO 5199
DIN EN ISO 15783

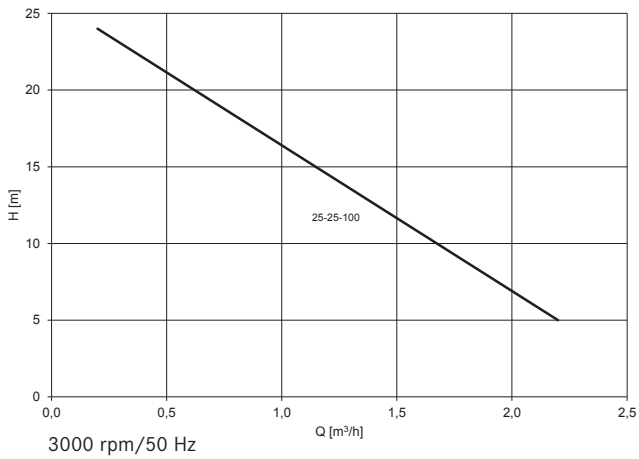

3000 rpm/50 Hz

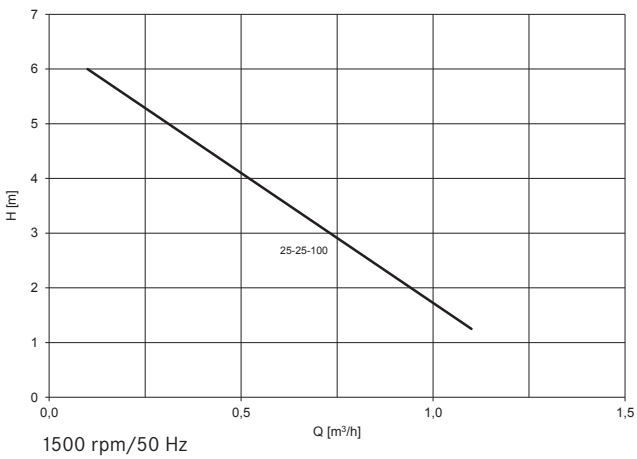

1500 rpm/50 Hz

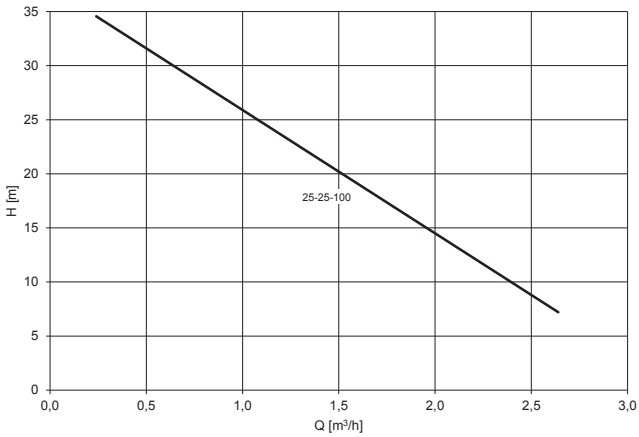

3600 rpm/60 Hz

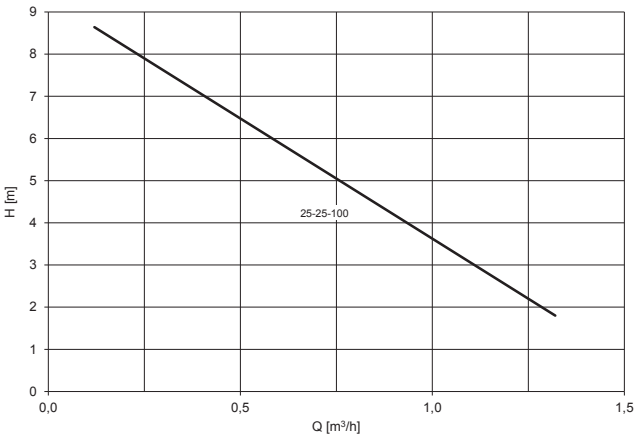

1800 rpm/60 Hz

MSKS

Solid PTFE Self-Priming Magnetic Drive Chemical Process Side Channel Pump

The self-priming MSKS features a radial vane impeller with a metal core. This type of impeller allows the pump to handle fluids with a gas content up to 25%. A separate priming tank is not necessary because the pump evacuates the suction line itself by creating a vacuum. The MSKS can even readily pump entrained air in the suction line while running, thus increasing reliability of operation. This pump achieves suction lifts up to 8.5 m.

Technical data	
Capacities (min./max.)	0.88 to 11 gpm
Heads (min./max.)	3.28 to 11.55 ft
Temperatures (min./max.)	–4 to +176 °F
Kinematic viscosities	0.5 to 350 cSt
Solids handling	0%

Directives
EC Machinery Directive
EC ATEX Directive

Standards
DIN EN ISO 5199
DIN EN ISO 15783

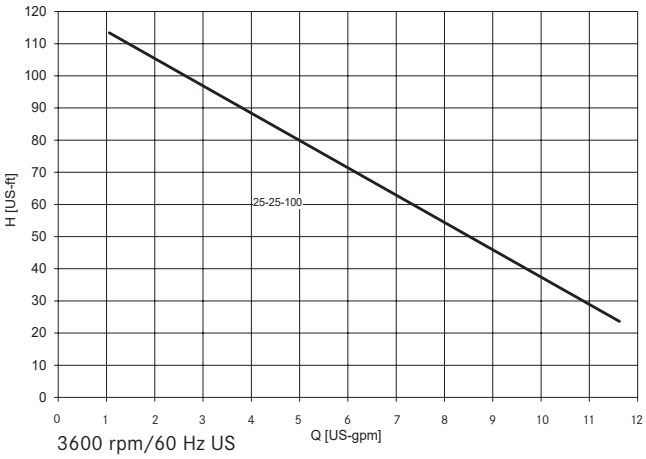

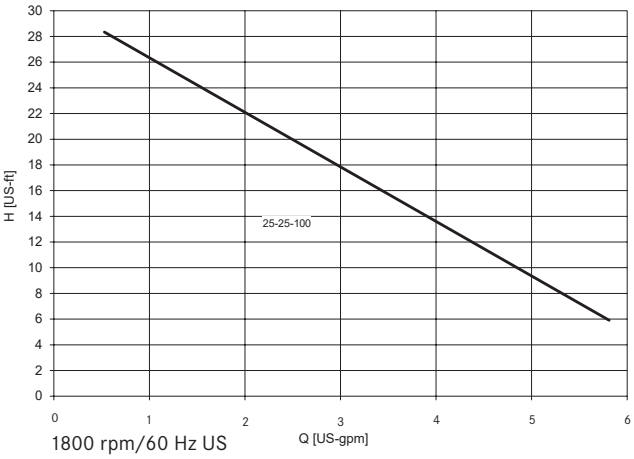

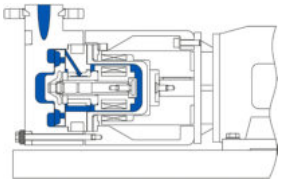

Close-coupled MSKS
with baseplate
–20°C to +80°C

MSKS with baseplate and motor
horizontal close-coupled (–20°C to +80°C)

Options
Comprehensive – Individual – Combinable

Casing

Materials
- Carbon-filled PTFE
- Virgin PTFE
- PVDF

Pressure rating
- PN 16*

With heating chamber

Connection flanges
- To DIN 2526
- Drilled to ANSI/ASME B16.5

Additional connections
- Casing drain (with or without flange)
- External flush connection for bearing lubrication
- Lantern monitoring connection
- Pt100 connection

Gasket materials
- PTFE-enveloped
- Gylon® blue

O-ring materials
- FEP/FKM
- Kalrez®/Chemraz®

Bearing assembly

Materials
- SSiC (sintered silicon carbide)

Containment shell

Materials
- PTFE
- Virgin PTFE
- Carbon-filled PTFE
- PVDF

*Maximum, varies depending on the pump model, pump size and casing material.

Pump protection

Containment shell leakage monitoring

Pt100 temperature probe

Engine load sensor

Mounts

Types
- Baseplate
- Horizontal

Materials
- Steel
- Stainless steel

Stilts

Drip pan

Grounding lugs

Bearing frame

Lubrication
- Grease lubrication

Coupling

Coupling guard
- Steel
- Brass

The options vary depending on the pump model.
Our sales staff will be glad to advise you in detail.

Sectional Views

MSKP

horizontal frame-mounted (–20°C to +100°C)

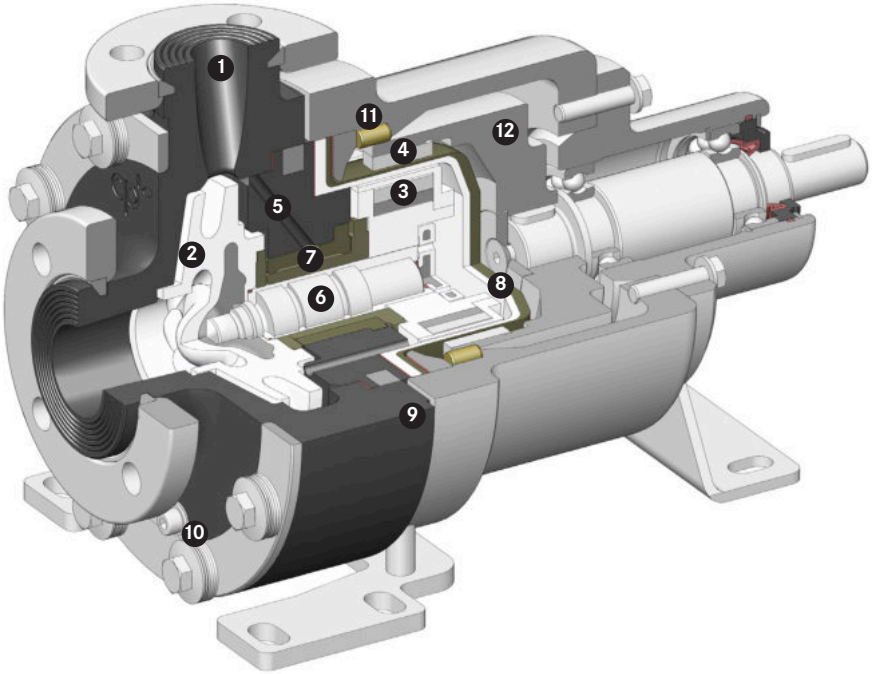

MSKPP

horizontal frame-mounted (–20°C to +100°C)

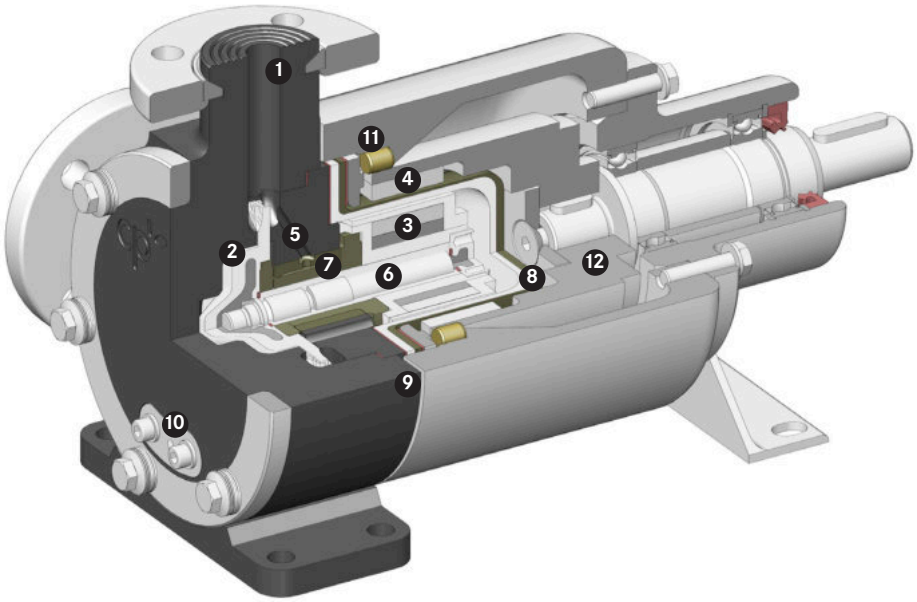

1 Solid plastic pump casing
2 Impeller
3 Drive magnet assembly (on product side)
4 Drive magnet assembly (on atmospheric side)
5 Internal bearing lubrication
6 Pump shaft
7 Plain bearing assembly
8 One piece, vacuum-resistant, non-metallic containment shell
9 Pt100 temperature probe on casing
10 Casing drain
11 Bump ring
12 Flyweel

MSKS

horizontal close-coupled (–20°C to +80°C)

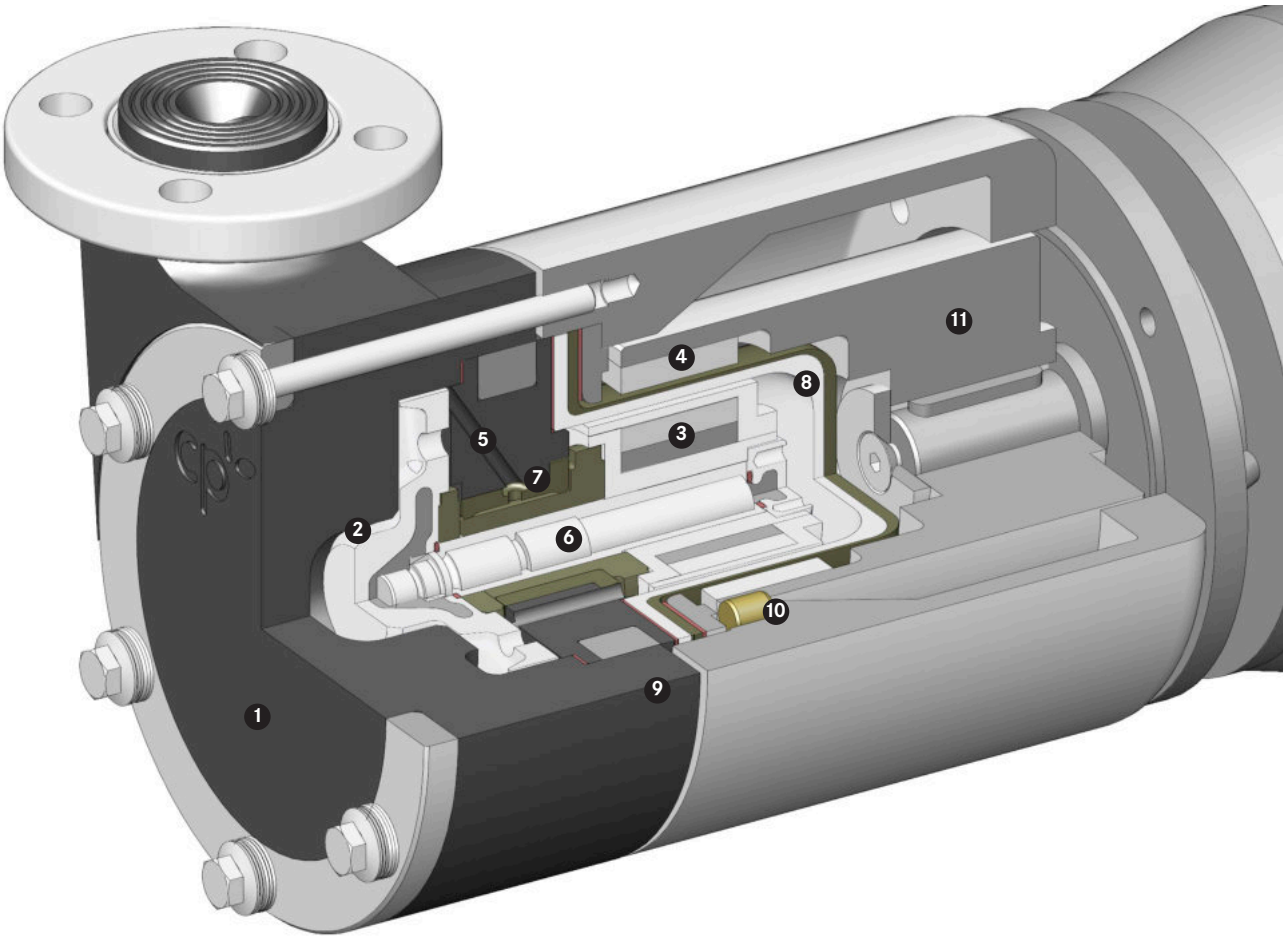

1 Solid plastic pump casing
2 Impeller
3 Drive magnet assembly (on product side)
4 Drive magnet assembly (on atmospheric side)
5 Internal bearing lubrication
6 Pump shaft
7 Plain bearing assembly
8 One piece, vacuum-resistant, non-metallic containment shell
9 Pt100 temperature probe on casing
10 Bump ring
11 Flyweel

Applications
Versatile – Complex – Special

CP's solid PTFE magnetic drive pumps are engineered to meet the most stringent quality standards and ensure reliability and utmost safety in production operations. Suitable for many different fluids in a variety of industries and processes, they are capable of handling low, medium and high flow volumes. They offer tremendous advantages, especially in pumping very sensitive or hazardous substances.

Industries

- Chemical processing: basic and fine chemicals (agrochemicals, speciality chemicals)
- Pharmaceuticals
- Petrochemicals
- Biotechnology processing
- Food and beverages

Processes

CP's solid PTFE magnetic drive pumps are designed for a wide range of processes, including:
- Chlor-alkali electrolysis
- Fertiliser production

Fluids

CP's solid PTFE magnetic drive pumps can handle acids, bases, solvents and other fluids.
For example:
- Bromine
- Dichloromethane
- Ethanol
- Hydrochloric acid
- Hydrofluoric acid
- Nitric acid
- Sodium hydroxide solution
- Sodium hypochlorite
- Sulphuric acid
- Tin chloride

Our sales staff will be glad to give you personalised advice tailored to your specific needs, industry, processes and fluids.

Energy Efficiency in Industrial Processes
Sustainable – Responsible – Ecological

Nowadays, industry is facing increasing demands to improve sustainability and energy efficiency. Pumps are considered to play a key role because they offer vast potential to save energy and costs. Already recognising this back in 1999, CP took action and has become a pioneer in energy-saving pumping systems.

In recent years, we have continuously enhanced the hydraulic performance of numerous pump systems, increasing their efficiency by up to 30 per cent. At the same time, we have steadily improved pump safety, a mission we have vigorously pursued ever since our company was established in 1948.

We are wholeheartedly committed to promoting sustainable manufacturing in industry around the world. Our customers benefit from a comprehensive range of solutions that reduce costs and CO_2 emissions over the long term. Cleaner pumps, cleaner planet: we firmly believe that sustainable research, thinking and action always pay off for everyone.

Cleaner pumps, cleaner planet: we firmly believe that sustainable research, thinking and action always pay off for everyone.

CP Pump Systems
Our Product Portfolio

Customer service

We offer the highest quality, many years of experience and first-class advice from a single source. Our bespoke pump systems meet a wide range of different requirements.

CP's customers benefit from a full service offering: the fastest availability of genuine spare parts, a complete set of technical documentation, competent and efficient customer support, and a dynamic and flexible repair service. All these services ensure that your pumps will operate faultlessly. Thanks to a network in over 70 countries, we advise and serve our customers directly on site.

Energy efficiency consulting

As a trend scout specialised in energy efficiency, CP can deliver a wide spectrum of services relating to pumps and motors: comprehensive advice, in-depth system analysis, meticulous planning and design. Our goal is to actively help our customers optimise the energy consumption of their pumping systems and thereby cut costs over the long term.

Backed by our many years of broad experience, we today advise and assist customers in both the private and public sectors. These include owners and operators of fluid processing plants in the chemical, pharmaceutical and diverse other industries.

Are you interested? Do you have any questions? We would be happy to discuss all the different options with you personally.

Stainless steel magnetic drive centrifugal pumps

MKP
Magnetic drive chemical process pump

MKP-S
Self-priming magnetic drive chemical process pump

MKTP
Magnetic drive chemical process sump pump

MKP-ANSI
Magnetic drive chemical process pump

MKPP
Magnetic drive in-line chemical process peripheral pump

SZMK
Magnetic drive in-line chemical process pump

Mobile centrifugal pump
Mobile magnetic drive chemical process pump

Stainless steel magnetic drive biotech process pump

MKP-Bio
Magnetic drive centrifugal pump for sterile processes

PFA lined magnetic drive centrifugal pumps

MKPL
Magnetic drive chemical process pump

MKPL-S
Self-priming magnetic drive chemical process pump

Solid PTFE magnetic drive centrifugal pumps

MSKP
Magnetic drive chemical process pump

MSKPP
Magnetic drive chemical process peripheral pump

MSKS
Self-priming magnetic drive chemical process side channel pump

Stainless steel mechanical seal centrifugal pumps

ZMP
The 3-In-One mechanical seal chemical process pump: crushing, mixing and pumping

PFA lined double mechanical seal centrifugal pump

EB
Double mechanical seal chemical process pump

Ceramic lined double mechanical seal centrifugal pump

ET
Double mechanical seal chemical process pump

Improving energy efficiency in pumping systems helps to create a cleaner planet.

Headquarters
CP Pumpen AG
Switzerland, Zofingen

SWISS MADE

Distribution companies
CP Pumpen GmbH
Germany, Mannheim

CP Pompes SAS
France, Strasbourg

CP Pumps Inc.
USA, Birmingham (AL)

Representative Office of CP Pumpen AG
Thailand, Bangkok

CP Pump Limited 씨피 펌프 유한회사
Republic of Korea, Seoul

Please find your local CP distributor on www.cp-pumps.com.

or contact CP directly:
+41 62 746 85 85 / info@cp-pumps.com.

Climate neutral
Print product
ClimatePartner.com/53213-1904-1008

FSC
www.fsc.org
MIX
Paper | Supporting responsible forestry
FSC® C007631

20240207_CP_BRO_MSKP_MSKPP_MSKS_en

cleaner pumps, cleaner planet™